ANSYS CONFERENCE &

30. CADFEM USERS' MEETING

Battery Management Simulation for Automotive Application with ANSYS Simplorer

Lucas Kostetzer

Motivation for System Simulation

- Automotive and especially HEV/EV systems consist of a variety of components.
- Each component may influence the behavior of another component.

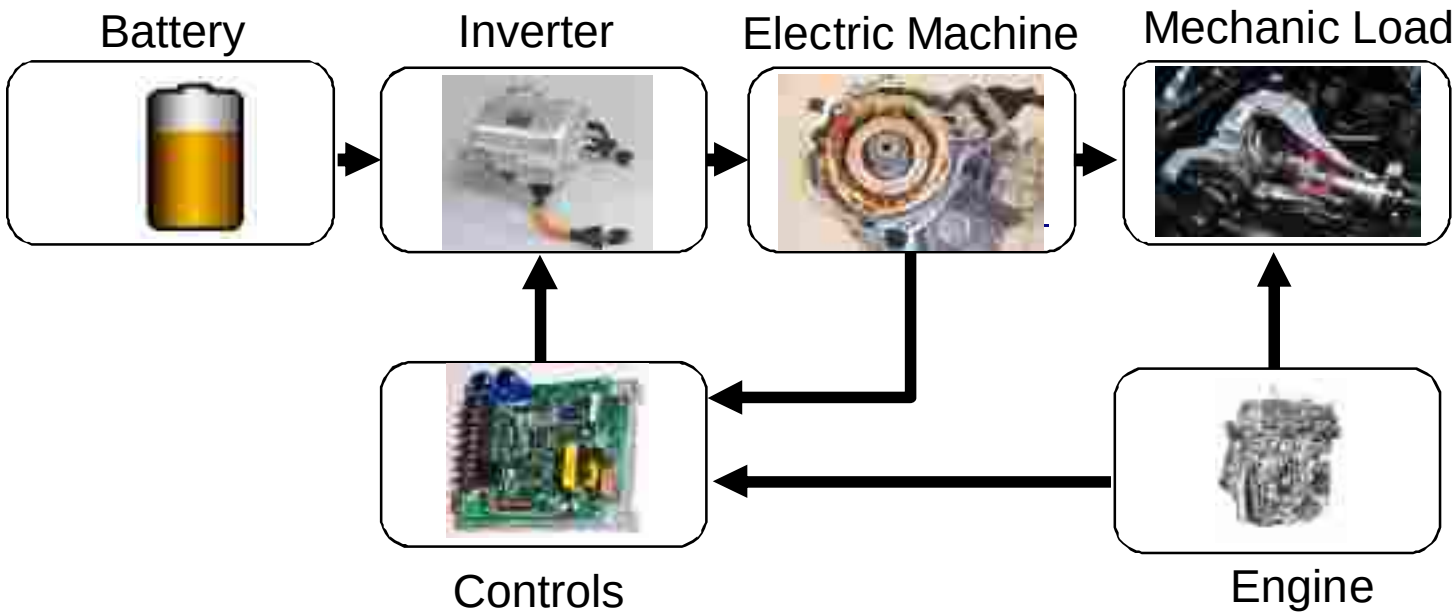

System-Simulation for Battery management

- Multi-level design and simulation

Design phase:	Specification & Sizing	Complete systems	Sub-systems	Implementation / product
@Battery:	Capacity / Max power	Cell balancing control	Cooling, DC converters	Complete BMS, hardware

Outline

- System level simulation with Simplorer
- Simulation battery loads with Complete vehicle simulation
  - Battery pack size
  - Performance
- Conclusion

ANSYS System level simulation tool

- Multi-Phsics integration
  - Mechanical, electrical thermal, fluids
  - EE lib:
    - Electric drives
    - Power electronics
    - Automatic control
- Connecting multi-scales
  - Co-Sim & Model Order Reduction

MBS

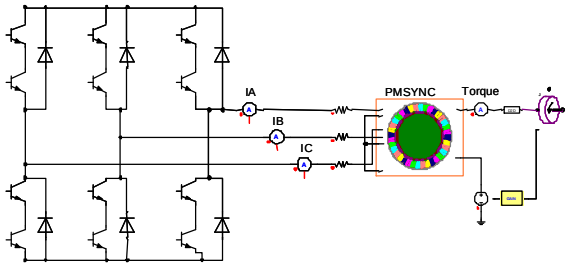

Maxwell

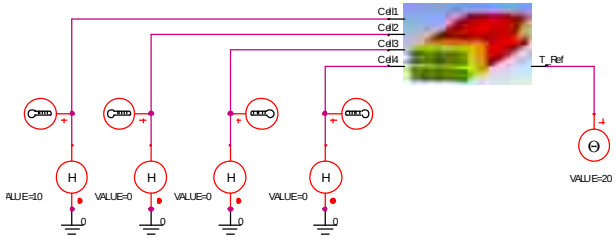

ANSYS-thermal +MOR

System simulation with ANSYS - Simplorer

EQU

a:= (t^(1.0/x)*rating)/(726.3^(1.0/x))

x:= -4.7306

rating:= 10

DATAPAIRS1

T1

RTH1

therm

RTH2

CTH1

GS1

(S1.AC_Sim)? 1k: (S1.DC_Sim)? 1k: rload2_ct

rload21

TR_Probe1

Equation Modeling Block

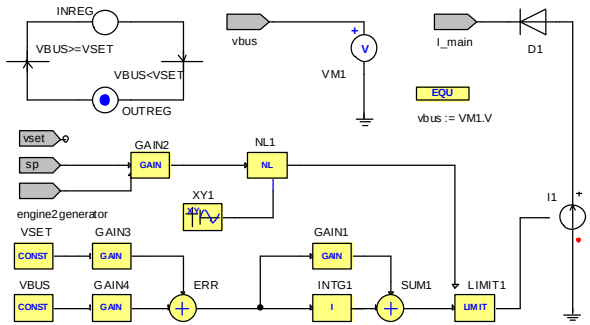

Circuit, Block, State

R2

Spice Import

Co-Sim

VHDL-AMS

FEA

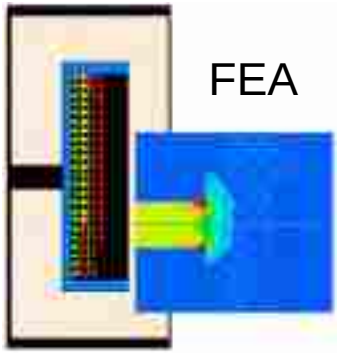

C code

Model parameters can be

* f(Project/Design and simulator variables)
* Can be made pins

Performance study

- Electric motor sizing
- Battery discharge power selection

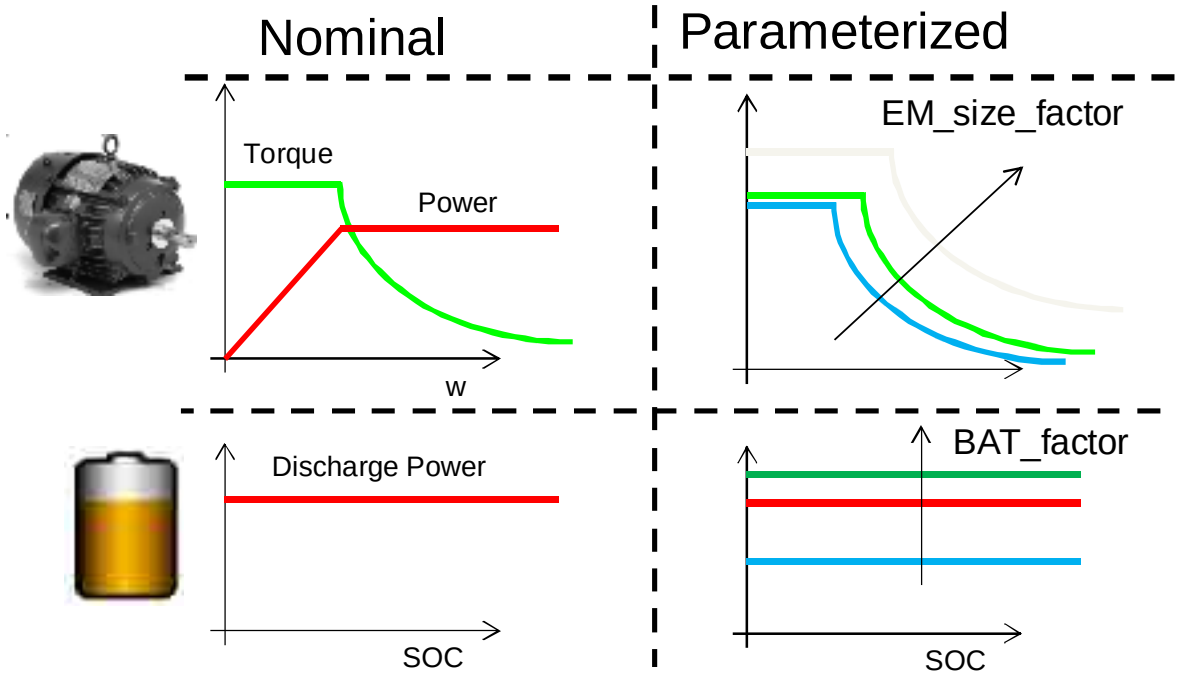

Performance evaluation

- Each motor/battery is one simulation case
- Battery and motor at the maximum possible power

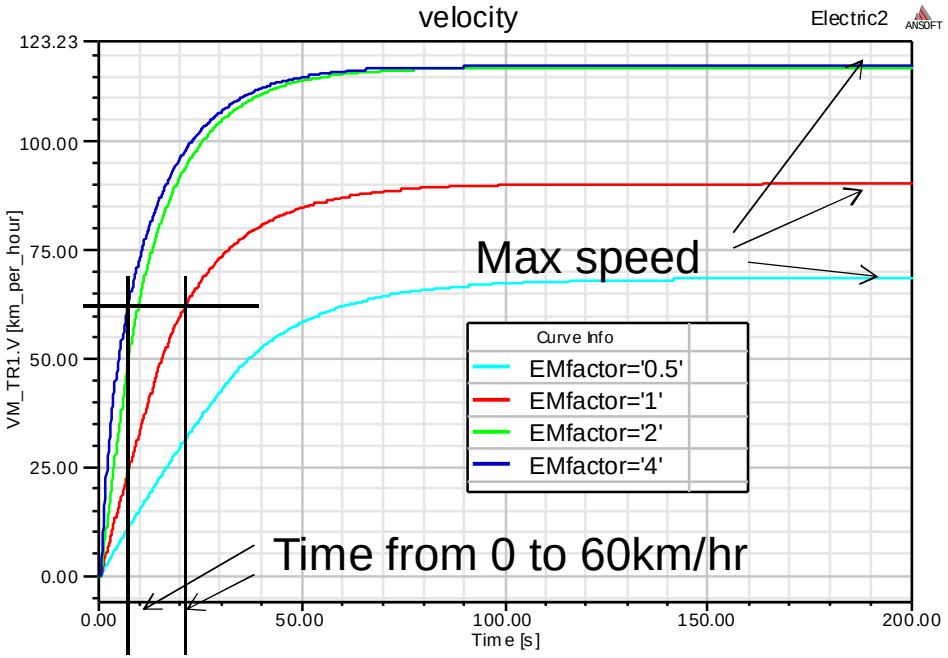

Parametric evaluation

- Battery and electric motor @maximum operation points
- CPU cost: 56 cases in ~5min (total)
- Battery limit or motor limits are reached

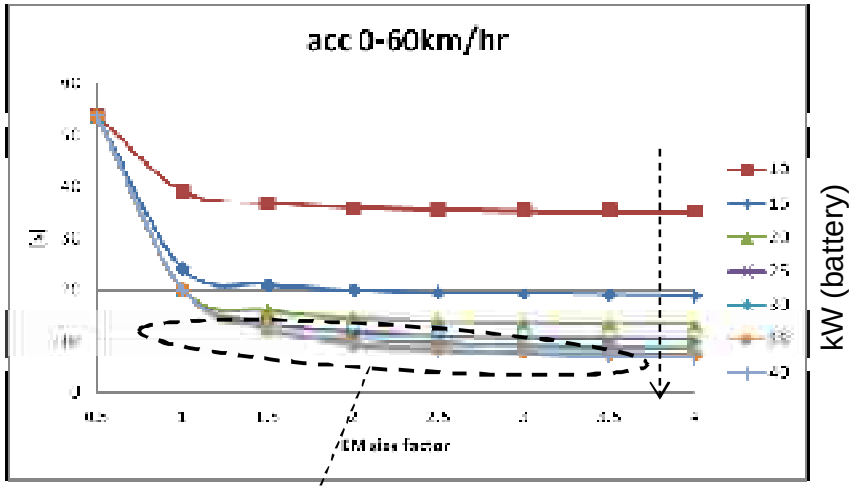

Decision by inverted analysis :
Size for a specific performance

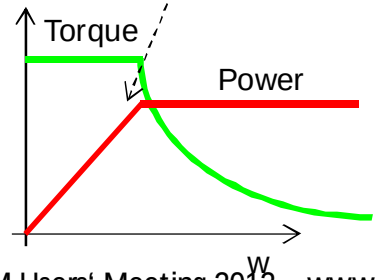

Battery Management System

- Dynamic loads
  - More details in electrical domain
- Thermal (Li-ion)
  - Temperature dependence
  - Cooling enviroment

Deeper in electrical domain

- Power electronics
- Motor

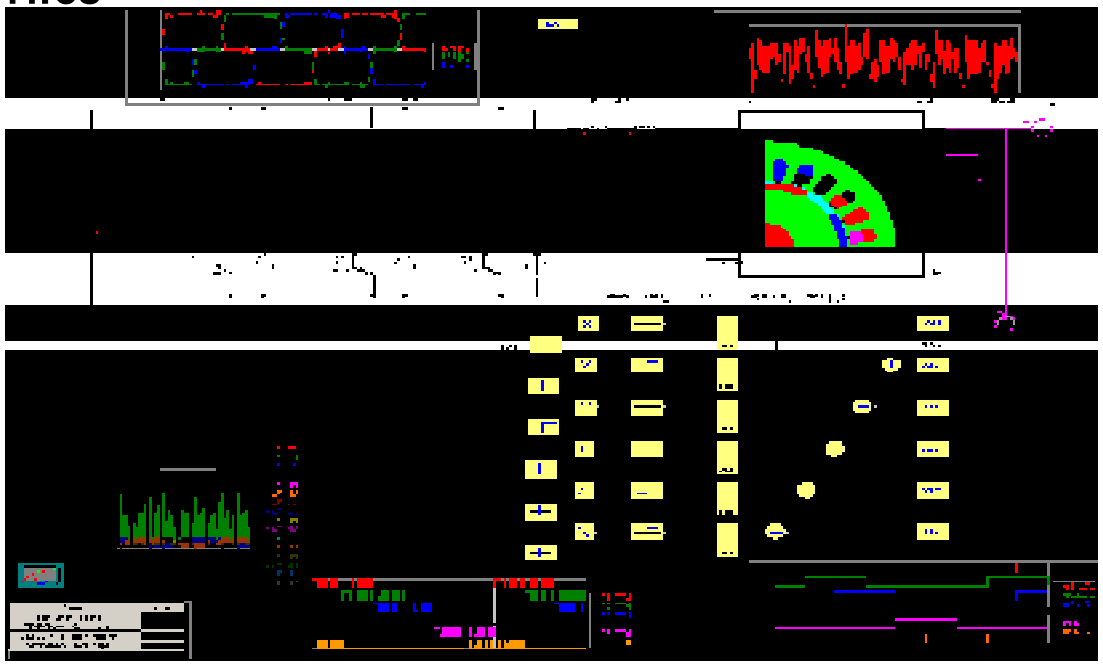

BTM – Battery Thermal Management

- Cell electrical model
- Pack thermal models
  - 3D based to System level

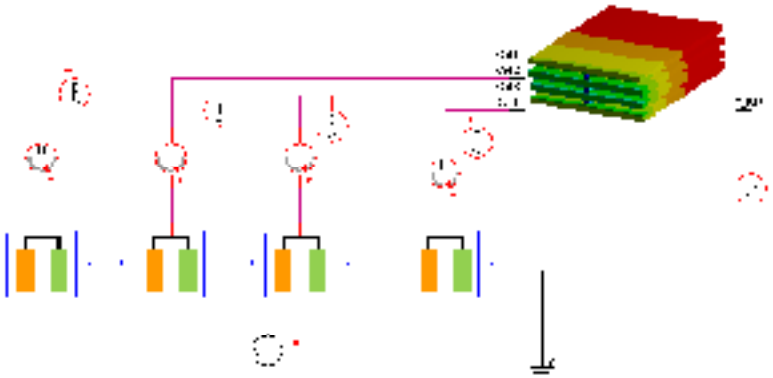

More info in:
Electromagnetics Compact Seminar
Battery pack development
Friday, 09:00

Conclusion

- Simplorer gives the system simulation enviroment for:
  - Modeling with Lib. and customizing
  - Early design evaluations
  - Sub-system details studies by connecting to other tools
    - ANSYS mech / Maxwell / ANSYS thermal